HSF

NOTES:
Current Rating: 0.5AMP
Contact Resistance: 60mΩ Max
Withstand Voltage: 500V AC/DC
Insulation Resistance: 100MΩ Min
Operation Temperature: −40℃ to +105℃

Contact Material: Phosphor Bronze
Contact plating: Au over Ni
Insulator Material: PA9T+30%G.F UL94V−0

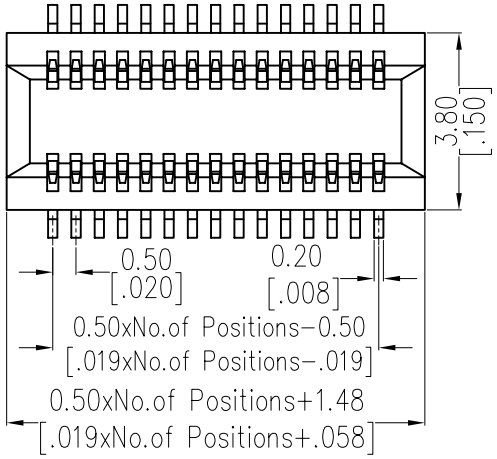

Recommended P.C.B Layout(Top Side)
(PCB BOARD TOLERANCE±0.05)

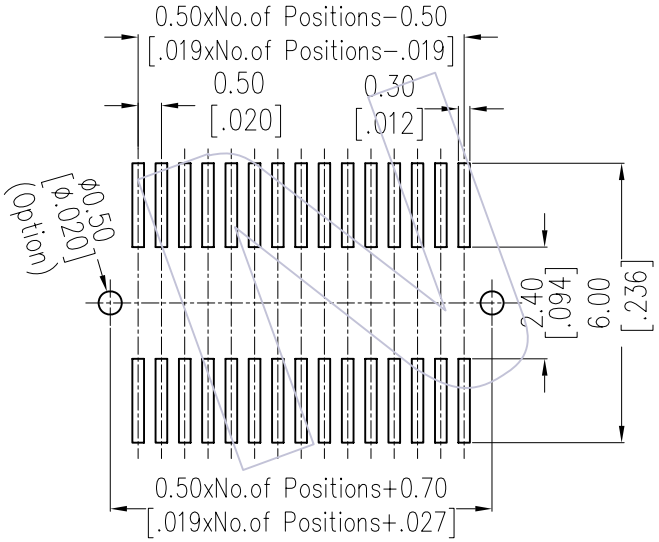

Ordering Information

3621-P XXX - XXX XX X 01

- No.of Pins
- Housing High: Plug=H1, Socket=H2
- Contact Plating: G0=Gold Flash, G3=10u"Gold, G4=15u"Gold, G5=30u"Gold
- T=Tube, P=Tube+CAP, R=Tape&Reel

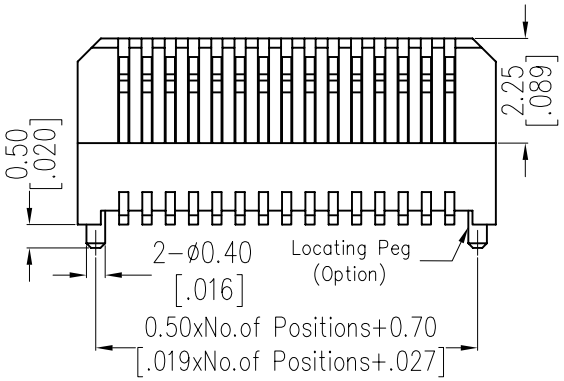

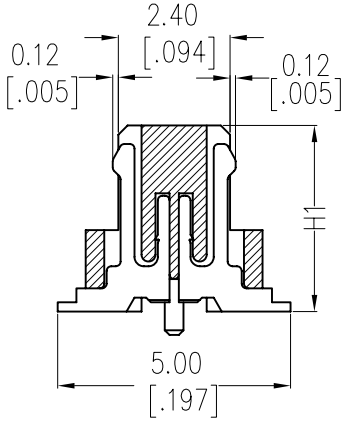

Plug(H1)
3.30
4.25
5.70

REV	DATE	MODIFICATION DESCRIPTION	CHANGE
A0	2012/11/22	NEW	------

OPERATION	
X.X	±0.40
X.XX	±0.25
X.XXX	±0.15
Angle	± 3°
DIM	TOL

DRAW	JYHuang	DATE	2012/11/22
CHECK		DATE	
APPROVE		DATE	

SCALE	FIT
UNIT	mm
SIZE	A4
SHEET	1/1
PROJ.	

PART NO. 3621-PXXX-XXXXXX01

TITLE: 0.50mm BO TO BO PLUG CONN BOX DUAL SLOTS

Customer NO.